SKIPIO

2 Door Undercounter Chiller/Freezer

SURF 15-2

Features:

- Imported compressors for efficient operation
- Front Breathing Hole for efficient air circulation
- Easy condenser cleaning
- Easy grip recessed door handles
- Digital control system
- Presence of key lock
- HACCP certified shelves that can load up to 60 kg
- LED Lamp which enhances the unit's display effect and reduces unecessary energy consumption

Specifications:

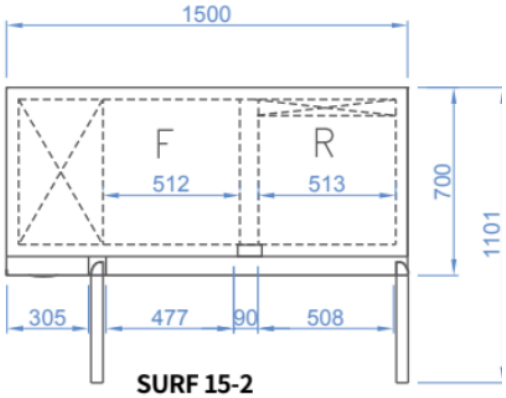

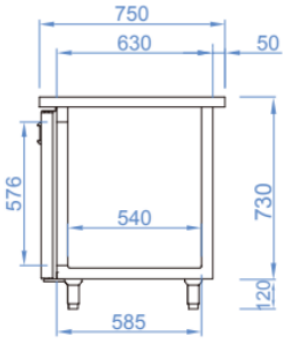

- Temperature range: -2°C to +8°C, -21°C to -12°C
- Refrigerant: R-404A
- Power: 316 W / 4.35 Amps
- Voltage: 220v, 60 Hz, 1ph
- Compressor: 3/4 HP
- Cooling type: Fan cooling type
- Dimension (LWH): 1500 x 700 x 850 mm
- Capacity (Chiller): 178 Liters / 6.3 cu.ft
- Capacity (Freezer): 190 Liters/ 6.7 cu. ft.
- No. of Shelves: 1
- No. of Doors: 2
- Weight: 101 kg

BESTERM
www.besterm.com.ph

info.besterm@gmail.com
(632) 523-1576/ 562-4154